IAI
Quality and Innovation

Direct Drive Motor DDA

www.intelligentactuator.com

High Speed, High Payload, High Accuracy, Introducing the Direct Drive Motor DDA

Features

The Direct Drive Motor DDA Series is:

- The motor directly drives the rotary table without a speed reducing mechanism, such as a belt or speed reducer.
- Compact, high-speed and responsive.
- More affordable than the conventional DD series.

1 Brake-equipped specifications have been added to the flange-less high torque/hollow type. Cleanroom specifications are also available.

Cleanliness Class 10 (Fed.Std.209D)

Cleanliness Class 2.5 (ISO14644-1)

		LT18C: Thin type (Rated torque: 8.4N·m)	LH18C: High torque type (Rated torque: 25N·m)
Large hollow bore type	Without brake (Standard/ Cleanroom specification)	Hollow bore: ϕ52mm 	Hollow bore: ϕ52mm 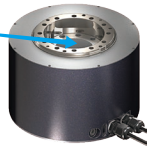
	With brake (Standard)	Hollow bore: ϕ35mm 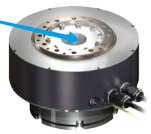	Hollow bore: ϕ35mm 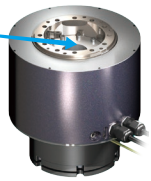

2 Achieves a lower price

The price has been reduced by about 33% as compared with the conventional DD series.

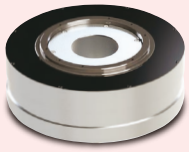

DD-LT18C

About 33% less

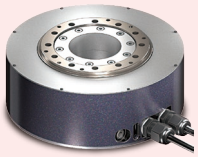

DDA-LT18C

3 High speed, high acceleration/deceleration

Shorter positioning time means shorter cycle time of your equipment, resulting in greater productivity.

<Comparison of Cycle Times>

Operating conditions: When a work part weighing 100g is placed on an aluminum disc of 300mm in diameter and 6mm in thickness and rotated by 180deg.

RCS2-RTC12L 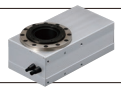

DDA-LT18C type 

DDA-LH18C type 

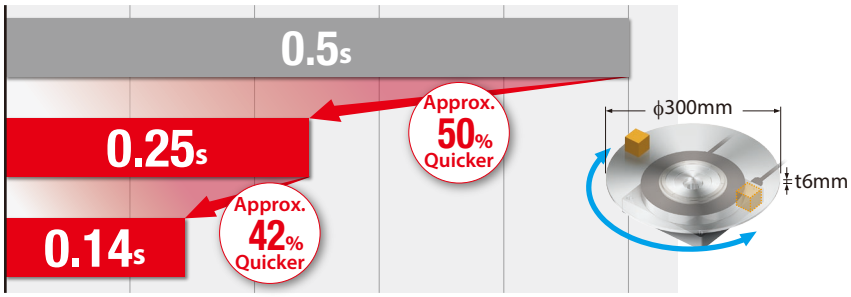

and Easy to Control!
Series Boasting Ultimate Usability!!

4 High torque, high payload

The high torque type has about three times more torque.

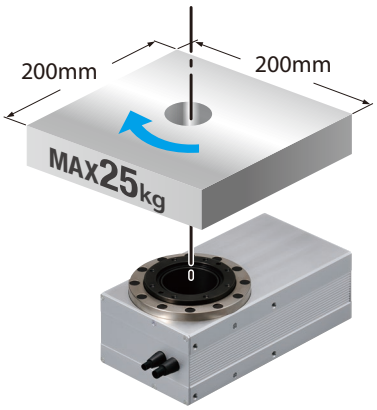

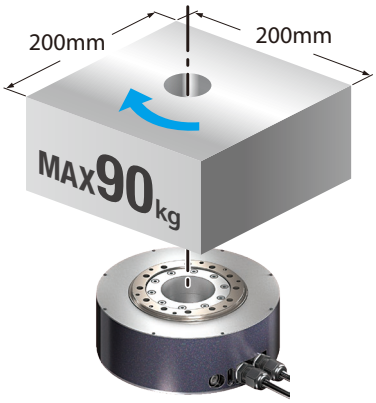

RCS2-RTC12L (Deceleration ratio: 1/30)	DDA-LT18C type	DDA-LH18C type
Allowable inertia moment	Allowable inertia moment	Allowable inertia moment
0.17kg·m²	0.60kg·m²	1.8kg·m²
Max. instantaneous torque: 8.6N·m	Max. instantaneous torque: 25.2N·m	Max. instantaneous torque: 75N·m

5 High-resolution type is available

	High resolution type	Standard type
Model number	DDA-L□18CP	DDA-L□18CS
Encoder resolution	20-bit 1,048,576 pulses/rev.	17-bit 131,072 pulses/rev.
Positioning repeatability	±0.00103 deg. (±3.7s)	±0.0055 deg. (±19.8s)

6 Corresponds to the indexing accuracy

It corresponds to the indexing accuracy when connected to SCON-CB, and allows for more accurate positioning.

	Encoder resolution	
	20-bit	17-bit
Indexing accuracy	±0.00833 deg. (±30s)	±0.01249 deg. (±45s)

DDA Motor Series List

Type		Large bore, slim type		Large bore, high torque type	
Encoder		Standard (17-bit)	High resolution (20-bit)	Standard (17-bit)	High resolution (20-bit)
Model number	Standard	DDA-LT18CS	DDA-LT18CP	DDA-LH18CS	DDA-LH18CP
	Cleanroom spec.	DDACR-LT18CS	DDACR-LT18CP	DDACR-LH18CS	DDACR-LH18CP
External view		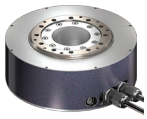			
Rated torque (N·m)		8.4		25	
Max. instantaneous torque (N·m)		25.2		75	
Rated speed (deg/s)		1,080		800	
Maximum speed (deg/s)		1,800		1,440	
Motor wattage (W)		200		600	
Size (ϕ)		ϕ180		ϕ180	
Height (mm)	w/o brake	70		122.8	
	w/ brake	115		187.3	
Hollow bore (ϕ)	w/o brake	ϕ52		ϕ52	
	w/ brake	ϕ35		ϕ35	
Mass (kg)	w/o brake	5.8		13	
	w/ brake	8.7		17.4	
Cleanliness *		Class 10 (Fed.Std.209D) Class 2.5 or equivalent (ISO 14644-1 Standard)		Class 10 (Fed.Std.209D) Class 2.5 or equivalent (ISO 14644-1 Standard)	
Encoder type		Index absolute/Multi-rotation absolute		Index absolute/Multi-rotation absolute	
Applicable controller		SCON-CB XSEL	SCON-CB	SCON-CB XSEL	SCON-CB
Reference page		P.5		P.9	

* Cleanroom specification only

Model Specification Items

DDA / DDACR Series — **Type** — **Encoder Type** — **Motor Wattage** — **360** Operation Range — **T2** Applicable Controllers — **Cable Length** — **Options**

DDA: Standard
DDACR: Cleanroom specification

	Type	Encoder
LT18CS	Large bore, slim	Standard (17-bit)
LT18CP	Large bore, slim	High resolution (20-bit)
LH18CS	Large bore, high torque	Standard (17-bit)
LH18CP	Large bore, high torque	High resolution (20-bit)

AI	Index absolute type
AM	Multi-rotation absolute type

200	200W
600	600W

360	360 deg.

T2	SCON
	XSEL-P/Q
	XSEL-R/S

Note:
Only SCON-CB can be selected for the high resolution encoder type (20-bit)

N	None
S	3m
M	5m
X□□	Specified length

A0	Cable exits from the bottom
A1	Cable exits from the side
B	Brake
FL	Flange

Application Examples

Index Table
<Inspection device for small boards>

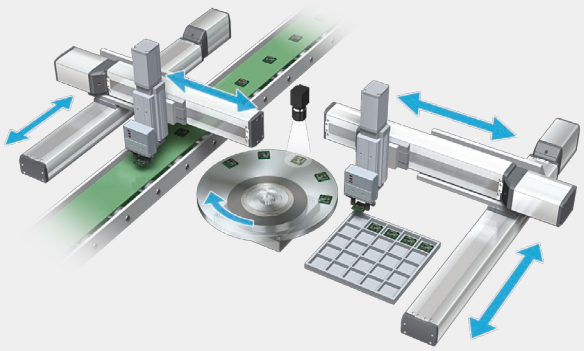

Transport of Workpieces
<Transporting parts from a conveyor to another>

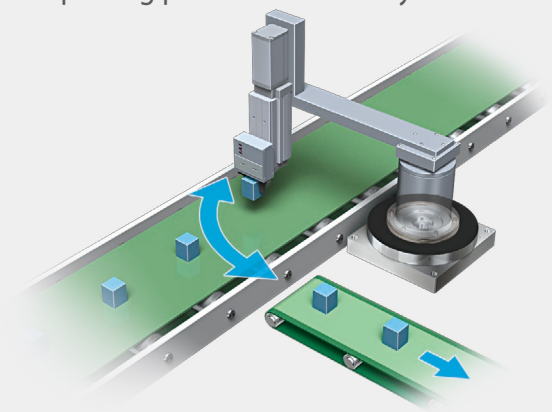

Multi-rotation Operation
<Transporting electronic components>

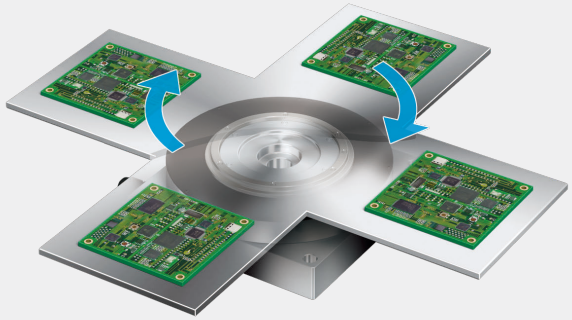

Index Table
<Parts assembly device>

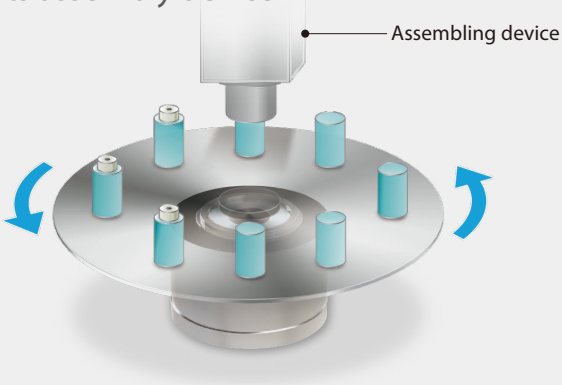

DDA-LT18C
DDACR-LT18C

Large Bore Type | Slim Type | Flange-Less Type | Clean Room Type

■ Model Specification Items

DDA / DDACR — LT18C ☐ — ☐ — 200 — 360 — T2 — ☐ — ☐

Series	Type	Encoder Type	Motor Type	Operation Range	Applicable Controllers	Cable Length	Options
DDA : Standard DDACR : Cleanroom specification	S : Standard (17-bit) P : High resolution (20-bit)	AI : Index absolute type AM: Multi-rotation absolute type	200: 200W	360: 360 deg.	T2 : SCON XSEL-P/Q XSEL-R/S Note: Only SCON for LT18CP	N : None S : 3m M : 5m X☐☐ : Specified length	Please refer to the options table below. * Please make sure to specify either A0 or A1 for the cable exit direction.

* Controller is not included.

CE RoHS

Horizontal | Vertical | Side | Ceiling

* Please refer to P.16 for more information on the installation method.

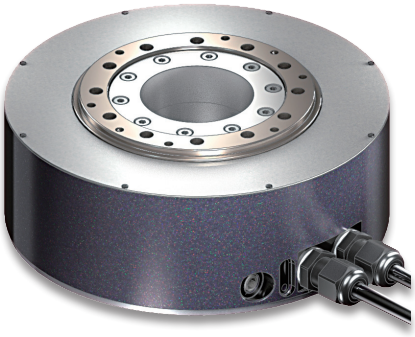

POINT Selection Notes

(Note 1) The value in ( ) indicates the maximum speed. The maximum speed may not be reached if the moving distance is short.
(Note 2) Assuming that the actuator is operated 8 hours a day at the rated speed and smooth operation without shock, the actuator will reach its life in five years based on this load.
(Note 3) The maximum cable length is 30m. Specify a desired length in meters. (Example: X08 = 8m)
(Note 4) The index absolute type cannot be used in the pulse-train control and MECHATROLINK III control.
(Note 5) Note that only the short-cut control is allowed when using XSEL with the index absolute type.

Model/Specifications

Encoder type	Model number	Motor wattage (W)	Operation range (deg.) (*1)	Speed (deg./s) (Note 1)	Rated torque (N·m) (*2)	Maximum instantaneous torque (N·m)	Allowable inertia moment (kg·m²)	Rotor inertia (kg·m²)
17-bit index absolute type	DDA (CR)-LT18CS-AI-200-360-T2-①-②	200	0~359.999 deg.	1~1,080 (1~1,800)	8.4	25.2	0.6	0.0043
17-bit multi-rotation absolute type	DDA (CR)-LT18CS-AM-200-360-T2-①-②		±9,999 deg. max.					
20-bit index absolute type	DDA (CR)-LT18CP-AI-200-360-T2-①-②		0~359.999 deg.					
20-bit multi-rotation absolute type	DDA (CR)-LT18CP-AM-200-360-T2-①-②		±2,520 deg. max.					

Legend: ① Cable length ② Option

(*1) SCON and XSEL have different minimum resolutions. Please refer to the instruction manual for more information.
(*2) The value when installed on an IAI rated heat dissipating plate. Please refer to P.16 for more information.

① Cable Length

Cable type	Cable code
Standard	**S** (3m)
	M (5m)
Specified length	**X06** (6m) ~**X10** (10m)
	X11 (11m) ~**X30** (30m)

* Please refer to P.18 for more information regarding the maintenance cables.

② Options

Name	Option code
Cable exits from the bottom	A0
Cable exits from the side	A1
Flange	FL

(Note) A0 (cable exits from the bottom) option and FL (flange) option cannot be selected together.

Run-out of Output Shaft

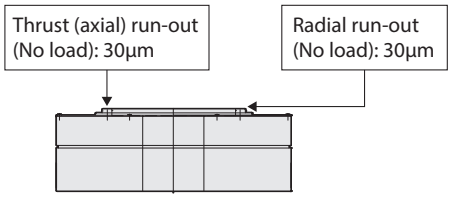

Common Specifications

Item		Description
Drive system		Direct drive motor
Positioning repeatability		17-bit: ±0.0055deg. (±19.8s); 20-bit: ±0.00103deg. (±3.7s)
Indexing accuracy *1		17-bit: ±0.01249deg. (±45s); 20-bit: ±0.00833deg. (±30s)
Allowable load moment (Note 2)		80N·m
Encoder resolution		17-bit: 131,072 pulses/rev. 20-bit: 1,048,576 pulses/rev.
Allowable thrust load (Note 2)		Forward: 3,100N; Reverse: 250N
Base material		Aluminum
Ambient operating temp. & humidity		0~40°C, 20~85% (Non-condensing)
Cleanroom specification	Cleanliness	Class 10 (Fed.Std.209D), class 2.5 or equivalent (ISO 14644-1 Standard)
	Suction amount	35Nℓ/min
Weight		5.8kg

*1 Indexing accuracy is supported when connected to SCON-CB.

Dimensions

CAD drawings can be downloaded from our website.
www.intelligentactuator.com 2D CAD 3D CAD

Cable exits from the bottom
(Option code: A0)

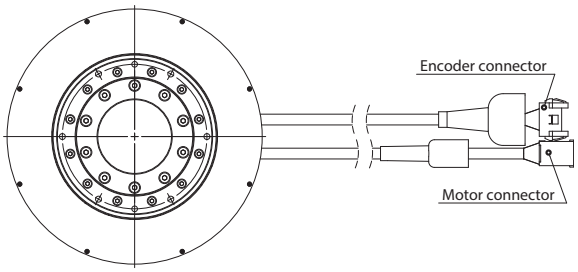

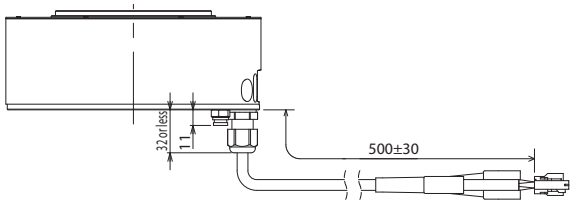

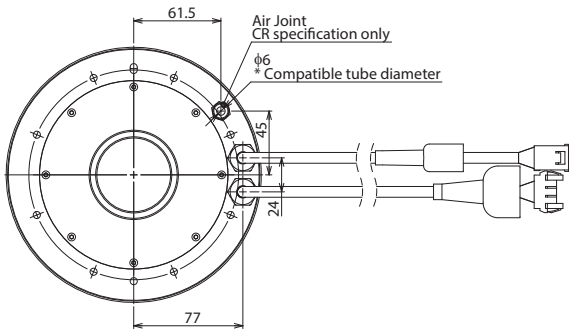

Cable exits from the side
(Option code: A1)

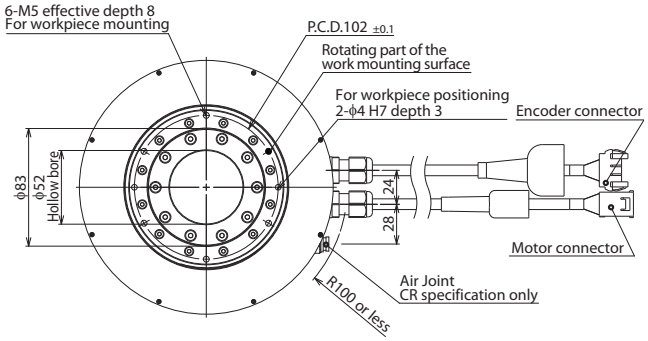

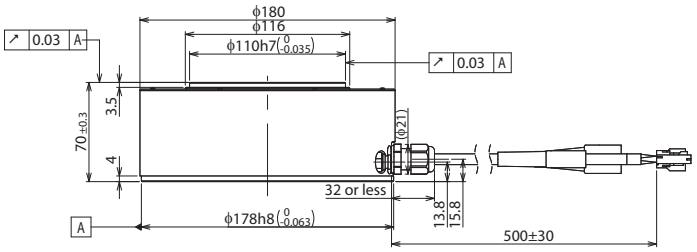

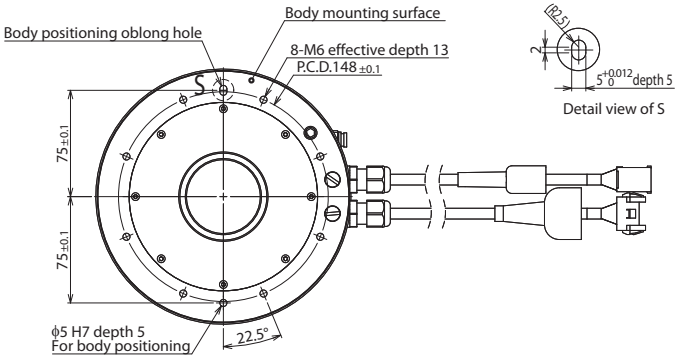

Applicable Controllers

The DDA series actuators can be operated by the controllers indicated below. Please select the type depending on your intended use.

Name	External view	Max. number of controlled axes	Power supply voltage	Control method				Maximum number of positioning points	Reference page
				Positioner	Pulse-train	Program	Network *Option		
SCON-CB/CGB		1	Single-phase 200VAC	●	●	-	DeviceNet, CC-Link, PROFIBUS, CompoNet, MECHATROLINK, EtherCAT, EtherNet/IP, PROFINET	512 (768 for network spec.)	P.14
SCON-LC/LCG		1	Single-phase 200VAC	-	-	●		512 (768 for network spec.)	P.14
XSEL-P/Q/R/S		8	Single-phase 200VAC Three-phase 200VAC	-	-	●	Note: The type of compatible networks will vary depending on the controller. Please refer to reference page for more information.	53,332 (Depending on the type)	P.15

* LT18CP can only be operated by SCON. * Please refer to P.16 for the precautions in selecting controllers.

DDA-LT18C-B

Large Bore Type | Slim Type | Flange-Less Type

■ Model Specification Items

DDA	–	LT18C □	–	□	–	200	–	360	–	T2	–	□	–	□	–	B
Series	—	Type	—	Encoder Type	—	Motor Type	—	Operation Range	—	Applicable Controllers	—	Cable Length	—	Options	—	Option
		S : Standard (17-bit) P : High resolution (20-bit)		AI : Index absolute type AM : Multi-rotation absolute type		200: 200W		360: 360 deg.		T2 : SCON XSEL-P/Q XSEL-R/S Note: Only SCON for LT18CP		N : None S : 3m M : 5m X□□ : Specified length		Please refer to the options table below. * Please make sure to specify either A0 or A1 for the cable exit direction.		B: Brake

* Controller is not included.

RoHS

Horizontal | Vertical | Side | Ceiling

* Please refer to P.16 for more information on the installation method.

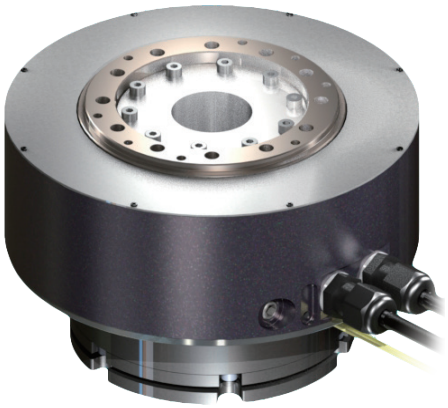

POINT Selection Notes

(Note 1) The value in ( ) indicates the maximum speed. The maximum speed may not be reached if the moving distance is short.
(Note 2) Assuming that the actuator is operated 8 hours a day at the rated speed and smooth operation without shock, the actuator will reach its life in five years based on this load.
(Note 3) The maximum cable length is 20m. Specify a desired length in meters. (Example: X08 = 8m)
(Note 4) The index absolute type cannot be used in the pulse-train control and MECHATROLINK III control.
(Note 5) Note that only the short-cut control is allowed when using XSEL with the index absolute type.
(Note 6) The brake is used for retention purposes only, so damage may be caused if it is actually used in attempts to slow or stop the actuator.

Model/Specifications

Encoder type	Model number	Motor wattage (W)	Operation range (deg.) (*1)	Speed (deg./s) (Note 1)	Rated torque (N·m) (*2)	Maximum instantaneous torque (N·m)	Allowable inertia moment (kg·m²)	Rotor inertia (kg·m²)
17-bit index absolute type	DDA-LT18CS-AI-200-360-T2-①-②-B	200	0~359.999 deg.	1~1,080 (1~1,800)	8.4	25.2	0.6	0.0043
17-bit multi-rotation absolute type	DDA-LT18CS-AM-200-360-T2-①-②-B		±9,999 deg. max.					
20-bit index absolute type	DDA-LT18CP-AI-200-360-T2-①-②-B		0~359.999 deg.					
20-bit multi-rotation absolute type	DDA-LT18CP-AM-200-360-T2-①-②-B		±2,520 deg. max.					

Legend: ① Cable length ② Option

(*1) SCON and XSEL have different minimum resolutions. Please refer to the instruction manual for more information.
(*2) The value when installed on an IAI rated heat dissipating plate. Please refer to P.16 for more information.

① Cable Length

Cable type	Cable code
Standard	**S** (3m)
	M (5m)
Specified length	**X06** (6m) ~**X10** (10m)
	X11 (11m) ~**X20** (20m)

* Please refer to P.18 for more information regarding the maintenance cables.

② Options

Name	Option code
Cable exits from the bottom	A0
Cable exits from the side	A1
Brake (With brake box) *1	B

*1 A brake cable is not supplied if "N (None)" is selected as the cable length. Please order a brake cable as a separate item in that case.

Common Specifications

Item	Description
Drive system	Direct drive motor
Positioning repeatability	17-bit: ±0.0055deg. (±19.8s); 20-bit: ±0.00103deg. (±3.7s)
Indexing accuracy *1	17-bit: ±0.01249deg. (±45s); 20-bit: ±0.00833deg. (±30s)
Allowable load moment (Note 2)	80N·m
Encoder resolution	17-bit: 131,072 pulses/rev. 20-bit: 1,048,576 pulses/rev.
Allowable thrust load (Note 2)	Forward: 3,100N; Reverse: 250N
Brake retaining torque	25N·m
Base material	Aluminum
Ambient operating temp. & humidity	0~40°C, 20~85% (Non-condensing)
Weight	8.7kg

*1 Indexing accuracy is supported when connected to SCON-CB.

Run-out of Output Shaft

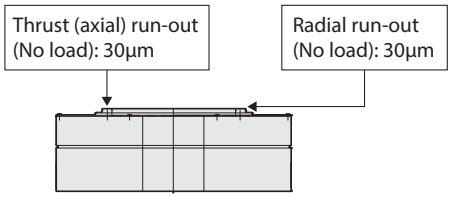

Dimensions

CAD drawings can be downloaded from our website.
www.intelligentactuator.com 2D CAD 3D CAD

Cable exits from the bottom
(Option code: A0)

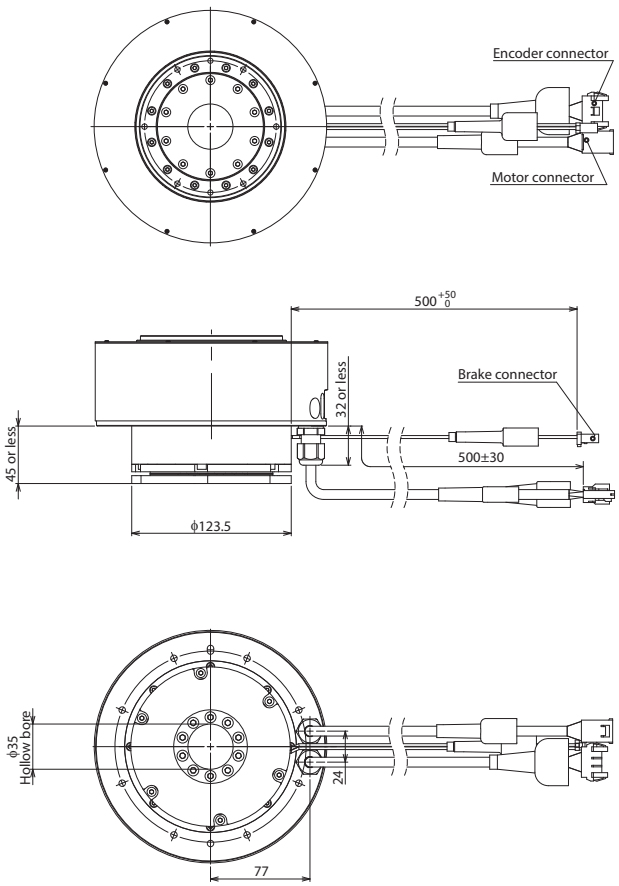

Cable exits from the side
(Option code: A1)

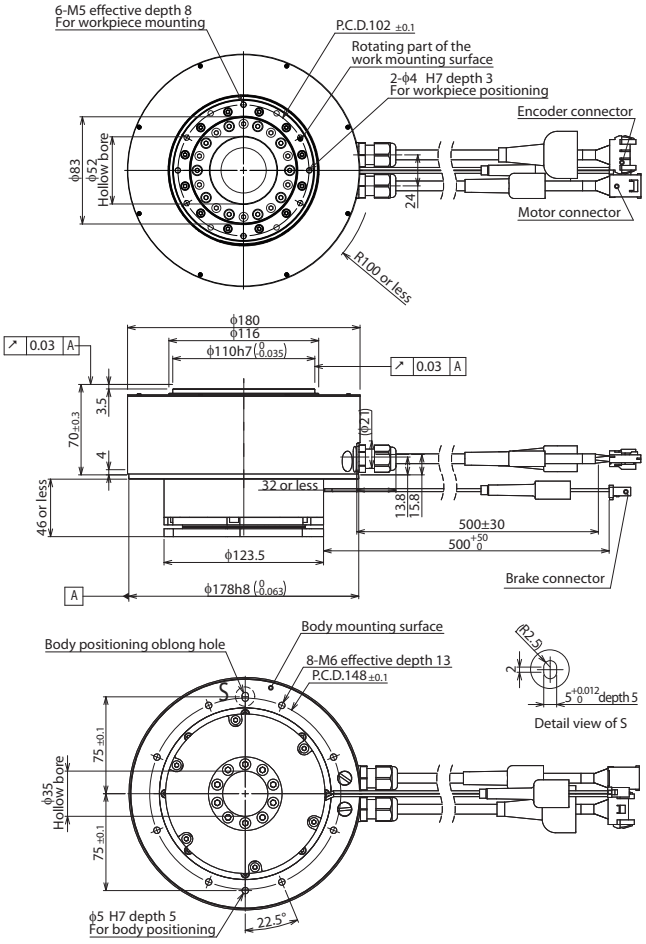

Applicable Controllers

The DDA series actuators can be operated by the controllers indicated below. Please select the type depending on your intended use.

Name	External view	Max. number of controlled axes	Power supply voltage	Control method				Maximum number of positioning points	Reference page
				Positioner	Pulse-train	Program	Network *Option		
SCON-CB/CGB		1	Single-phase 200VAC	●	●	-	DeviceNet, CC-Link, PROFIBUS, CompoNet, MECHATROLINK, EtherCAT, EtherNet/IP, PROFINET	512 (768 for network spec.)	P.14
SCON-LC/LCG		1	Single-phase 200VAC	-	-	●		512 (768 for network spec.)	P.14
XSEL-P/Q/R/S		8	Single-phase 200VAC Three-phase 200VAC	-	-	●	Note: The type of compatible networks will vary depending on the controller. Please refer to reference page for more information.	53,332 (Depending on the type)	P.15

* LT18CP can only be operated by SCON. * Please refer to P.16 for the precautions in selecting controllers.

DDA-LH18C
DDACR-LH18C

Large Bore Type | High Torque Type | Flange-Less Type | Clean Room Type

■ Model Specification Items

Series	Type	Encoder Type	Motor Type	Operation Range	Applicable Controllers	Cable Length	Options
DDA : Standard DDACR : Cleanroom specification	S : Standard (17-bit) P : High resolution (20-bit)	AI : Index absolute type AM : Multi-rotation absolute type	600 : 600W	360 : 360 deg.	T2 : SCON XSEL-P/Q XSEL-R/S Note : Only SCON for LH18CP	N : None S : 3m M : 5m X□□ : Specified length	Please refer to the options table below. * Please make sure to specify either A0 or A1 for the cable exit direction.

DDA/DDACR — LH18C□ — □ — 600 — 360 — T2 — □ — □

* Controller is not included.

CE RoHS

Horizontal | Vertical | Side | Ceiling

* Please refer to P.16 for more information on the installation method.

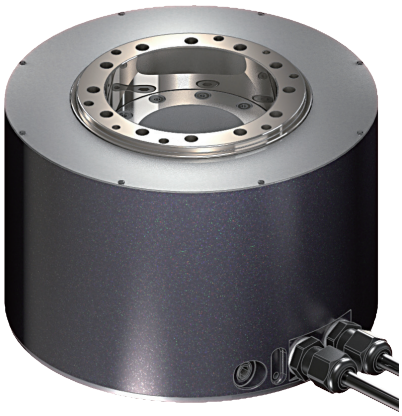

POINT Selection Notes

(Note 1) The value in ( ) indicates the maximum speed. The maximum speed may not be reached if the moving distance is short.
(Note 2) Assuming that the actuator is operated 8 hours a day at the rated speed and smooth operation without shock, the actuator will reach its life in five years based on this load.
(Note 3) The maximum cable length is 30m. Specify a desired length in meters. (Example: X08 = 8m)
(Note 4) The index absolute type cannot be used in the pulse-train control and MECHATROLINK III control.
(Note 5) Note that only the short-cut control is allowed when using XSEL with the index absolute type.

Model/Specifications

Encoder type	Model number	Motor wattage (W)	Operation range (deg.) (*1)	Speed (deg./s) (Note 1)	Rated torque (N·m) (*2)	Maximum instantaneous torque (N·m)	Allowable inertia moment (kg·m²)	Rotor inertia (kg·m²)
17-bit index absolute type	DDA (CR)-LH18CS-AI-600-360-T2-①-②	600	0~359.999 deg.	1~800 (1~1,440)	25	75	1.8	0.0092
17-bit multi-rotation absolute type	DDA (CR)-LH18CS-AM-600-360-T2-①-②		±9,999 deg. max.					
20-bit index absolute type	DDA (CR)-LH18CP-AI-600-360-T2-①-②		0~359.999 deg.					
20-bit multi-rotation absolute type	DDA (CR)-LH18CP-AM-600-360-T2-①-②		±2,520 deg. max.					

Legend: ① Cable length ② Option

(*1) SCON and XSEL have different minimum resolutions. Please refer to the instruction manual for more information.
(*2) The value when installed on an IAI rated heat dissipating plate. Please refer to P.16 for more information.

① Cable Length

Cable type	Cable code
Standard	**S** (3m)
	M (5m)
Specified length	**X06** (6m) ~**X10** (10m)
	X11 (11m) ~**X30** (30m)

* Please refer to P.18 for more information regarding the maintenance cables.

② Options

Name	Option code
Cable exits from the bottom	A0
Cable exits from the side	A1
Flange	FL

(Note) A0 (cable exits from the bottom) option and FL (flange) option cannot be selected together.

Run-out of Output Shaft

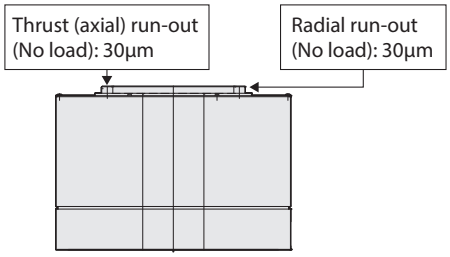

Common Specifications

Item		Description
Drive system		Direct drive motor
Positioning repeatability		17-bit: ±0.0055deg. (±19.8s); 20-bit: ±0.00103deg. (±3.7s)
Indexing accuracy *1		17-bit: ±0.01249deg. (±45s); 20-bit: ±0.00833deg. (±30s)
Allowable load moment (Note 2)		80N·m
Encoder resolution		17-bit: 131,072 pulses/rev. 20-bit: 1,048,576 pulses/rev.
Allowable thrust load (Note 2)		Forward: 3,100N; Reverse: 250N
Base material		Aluminum
Ambient operating temp. & humidity		0~40°C, 20~85% (Non-condensing)
Cleanroom specification	Cleanliness	Class 10 (Fed.Std.209D), class 2.5 or equivalent (ISO 14644-1 Standard)
	Suction amount	35Nℓ/min
Weight		13kg

*1 Indexing accuracy is supported when connected to SCON-CB.

Dimensions

CAD drawings can be downloaded from our website.
www.intelligentactuator.com 2D CAD 3D CAD

Cable exits from the bottom
(Option code: A0)

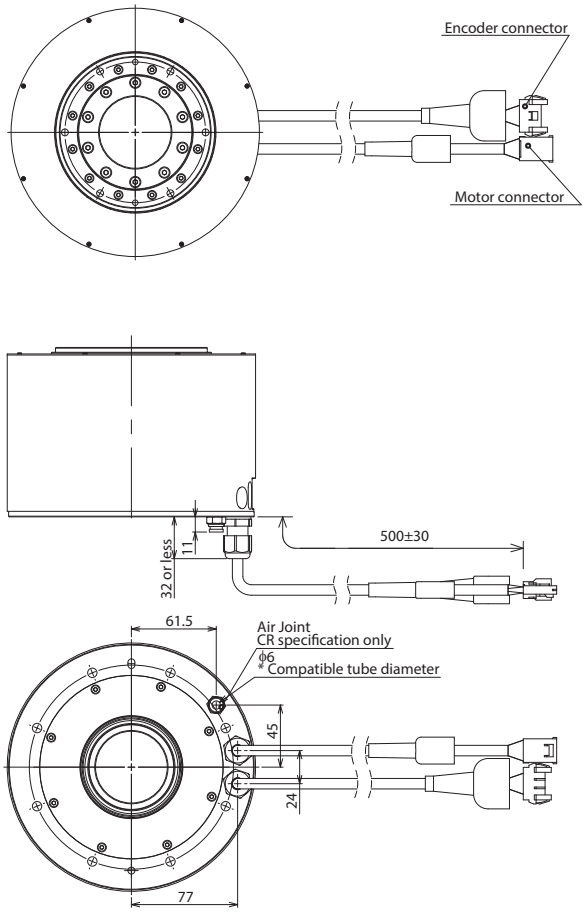

Cable exits from the side
(Option code: A1)

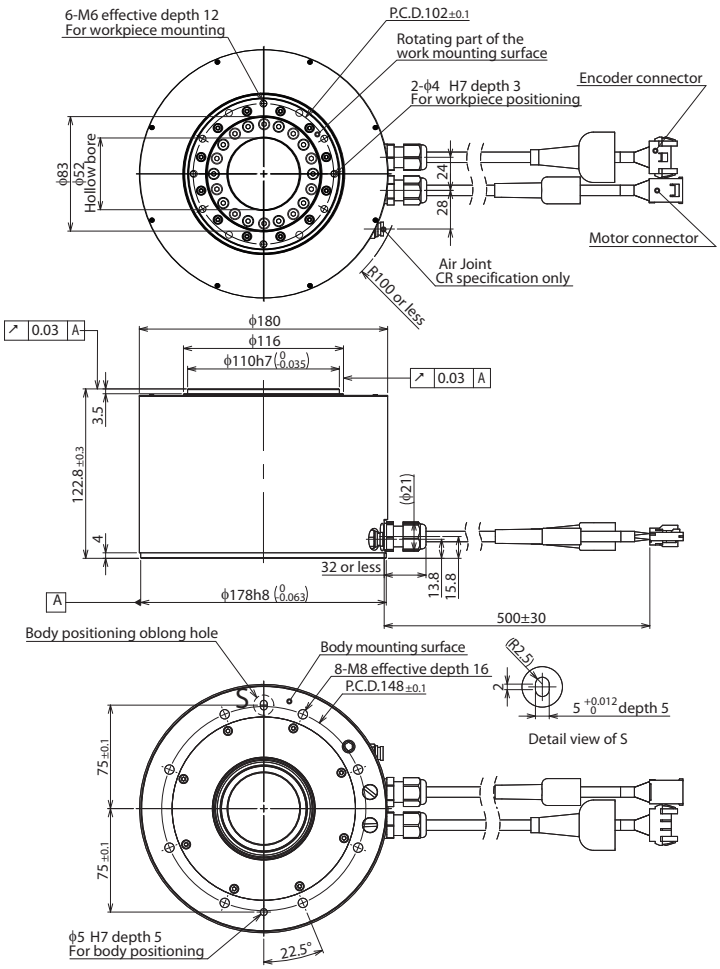

Applicable Controllers

The DDA series actuators can be operated by the controllers indicated below. Please select the type depending on your intended use.

Name	External view	Max. number of controlled axes	Power supply voltage	Control method				Maximum number of positioning points	Reference page
				Positioner	Pulse-train	Program	Network *Option		
SCON-CB/CGB		1	Single-phase 200VAC	●	●	-	DeviceNet, CC-Link, PROFIBUS, CompoNet, MECHATROLINK, EtherCAT, EtherNet/IP, PROFINET	512 (768 for network spec.)	P.14
SCON-LC/LCG		1	Single-phase 200VAC	-	-	●		512 (768 for network spec.)	P.14
XSEL-P/Q/R/S		8	Single-phase 200VAC Three-phase 200VAC	-	-	●	Note: The type of compatible networks will vary depending on the controller. Please refer to reference page for more information.	53,332 (Depending on the type)	P.15

* LH18CP can only be operated by SCON. * Please refer to P.16 for the precautions in selecting controllers.

DDA-LH18C-B

Large Bore Type | High Torque Type | Flange-Less Type

■ Model Specification Items

DDA	LH18C□	□	600	360	T2	□	□	B
Series	Type	Encoder Type	Motor Type	Operation Range	Applicable Controllers	Cable Length	Options	Option
	S : Standard (17-bit) P : High resolution (20-bit)	AI : Index absolute type AM : Multi-rotation absolute type	600 : 600W	360 : 360 deg.	T2 : SCON XSEL-P/Q XSEL-R/S Note : Only SCON for LH18CP	N : None S : 3m M : 5m X□□ : Specified length	Please refer to the options table below. * Please make sure to specify either A0 or A1 for the cable exit direction.	B : Brake

* Controller is not included.

RoHS

Horizontal | Vertical | Side | Ceiling

* Please refer to P.16 for more information on the installation method.

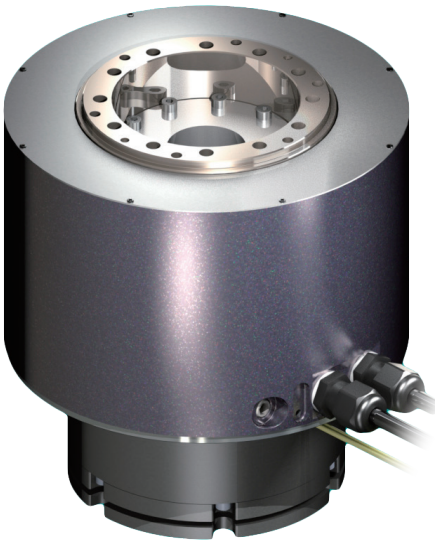

POINT Selection Notes

(Note 1) The value in ( ) indicates the maximum speed. The maximum speed may not be reached if the moving distance is short.
(Note 2) Assuming that the actuator is operated 8 hours a day at the rated speed and smooth operation without shock, the actuator will reach its life in five years based on this load.
(Note 3) The maximum cable length is 20m. Specify a desired length in meters. (Example: X08 = 8m)
(Note 4) The index absolute type cannot be used in the pulse-train control and MECHATROLINK III control.
(Note 5) Note that only the short-cut control is allowed when using XSEL with the index absolute type.
(Note 6) The brake is used for retention purposes only, so damage may be caused if it is actually used in attempts to slow or stop the actuator.

Model/Specifications

Encoder type	Model number	Motor wattage (W)	Operation range (deg.) (*1)	Speed (deg./s) (Note 1)	Rated torque (N·m) (*2)	Maximum instantaneous torque (N·m)	Allowable inertia moment (kg·m²)	Rotor inertia (kg·m²)
17-bit index absolute type	DDA-LH18CS-AI-600-360-T2-①-②-B	600	0~359.999 deg.	1~800 (1~1,440)	25	75	1.8	0.0092
17-bit multi-rotation absolute type	DDA-LH18CS-AM-600-360-T2-①-②-B		±9,999 deg. max.					
20-bit index absolute type	DDA-LH18CP-AI-600-360-T2-①-②-B		0~359.999 deg.					
20-bit multi-rotation absolute type	DDA-LH18CP-AM-600-360-T2-①-②-B		±2,520 deg. max.					

Legend: ① Cable length ② Option

(*1) SCON and XSEL have different minimum resolutions. Please refer to the instruction manual for more information.
(*2) The value when installed on an IAI rated heat dissipating plate. Please refer to P.16 for more information.

① Cable Length

Cable type	Cable code
Standard	**S** (3m)
	M (5m)
Specified length	**X06** (6m) ~**X10** (10m)
	X11 (11m) ~**X20** (20m)

* Please refer to P.18 for more information regarding the maintenance cables.

② Options

Name	Option code
Cable exits from the bottom	A0
Cable exits from the side	A1
Brake (With brake box) *1	B

*1 A brake cable is not supplied if "N (None)" is selected as the cable length. Please order a brake cable as a separate item in that case.

Run-out of Output Shaft

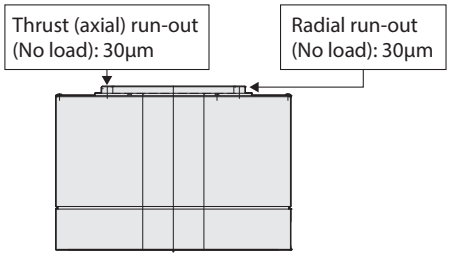

Common Specifications

Item	Description
Drive system	Direct drive motor
Positioning repeatability	17-bit: ±0.0055deg. (±19.8s); 20-bit: ±0.00103deg. (±3.7s)
Indexing accuracy *1	17-bit: ±0.01249deg. (±45s); 20-bit: ±0.00833deg. (±30s)
Allowable load moment (Note 2)	80N·m
Encoder resolution	17-bit: 131,072 pulses/rev. 20-bit: 1,048,576 pulses/rev.
Allowable thrust load (Note 2)	Forward: 3,100N; Reverse: 250N
Base material	Aluminum
Brake retaining torque	50N·m
Ambient operating temp. & humidity	0~40°C, 20~85% (Non-condensing)
Weight	17.4kg

*1 Indexing accuracy is supported when connected to SCON-CB.

Dimensions

CAD drawings can be downloaded from our website.
www.intelligentactuator.com 2D CAD 3D CAD

Cable exits from the bottom
(Option code: A0)

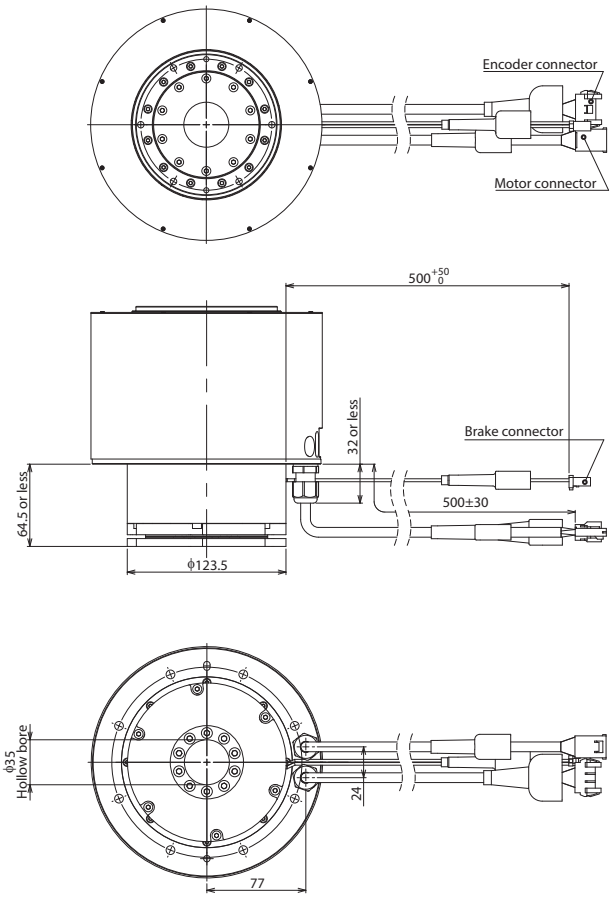

Cable exits from the side
(Option code: A1)

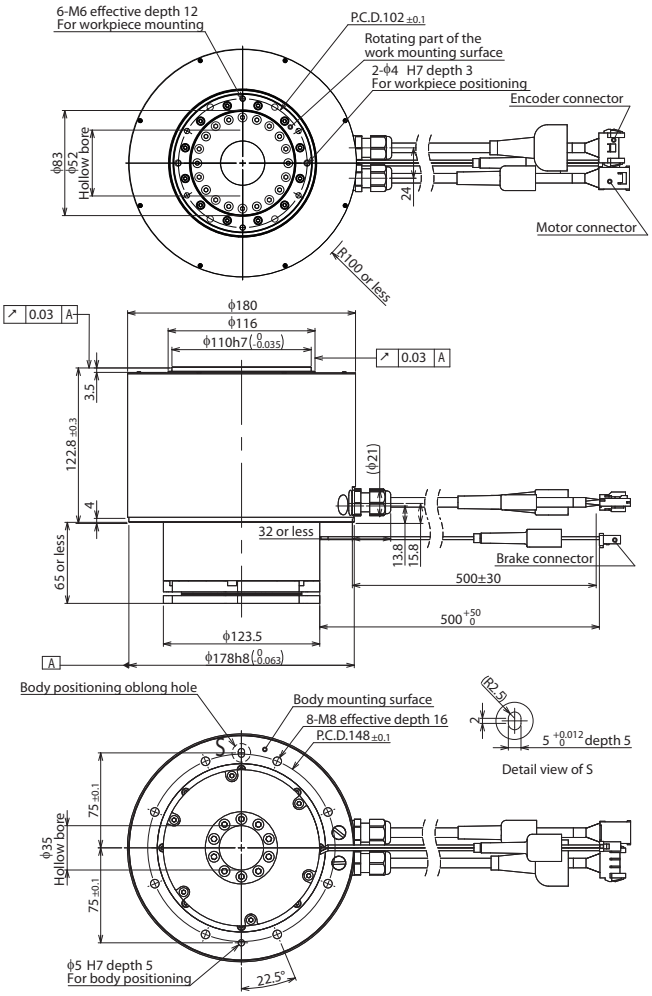

Applicable Controllers

The DDA series actuators can be operated by the controllers indicated below. Please select the type depending on your intended use.

Name	External view	Max. number of controlled axes	Power supply voltage	Control method				Maximum number of positioning points	Reference page
				Positioner	Pulse-train	Program	Network *Option		
SCON-CB/CGB		1	Single-phase 200VAC	●	●	-	DeviceNet, CC-Link, PROFIBUS, CompoNet, MECHATROLINK, EtherCAT, EtherNet/IP, PROFINET	512 (768 for network spec.)	P.14
SCON-LC/LCG		1	Single-phase 200VAC	-	-	●		512 (768 for network spec.)	P.14
XSEL-P/Q/R/S		8	Single-phase 200VAC Three-phase 200VAC	-	-	●	Note: The type of compatible networks will vary depending on the controller. Please refer to reference page for more information.	53,332 (Depending on the type)	P.15

* LH18CP can only be operated by SCON. * Please refer to P.16 for the precautions in selecting controllers.

Options

Brake Option Code: B

It is a retention mechanism for holding the stop position when the power or servo is OFF to prevent the workpieces and attachments from being damaged when used in side or vertical positions.
Be sure to connect a brake box for models with brake.

■ Brake Box

Model Number: IA-110-DD-4

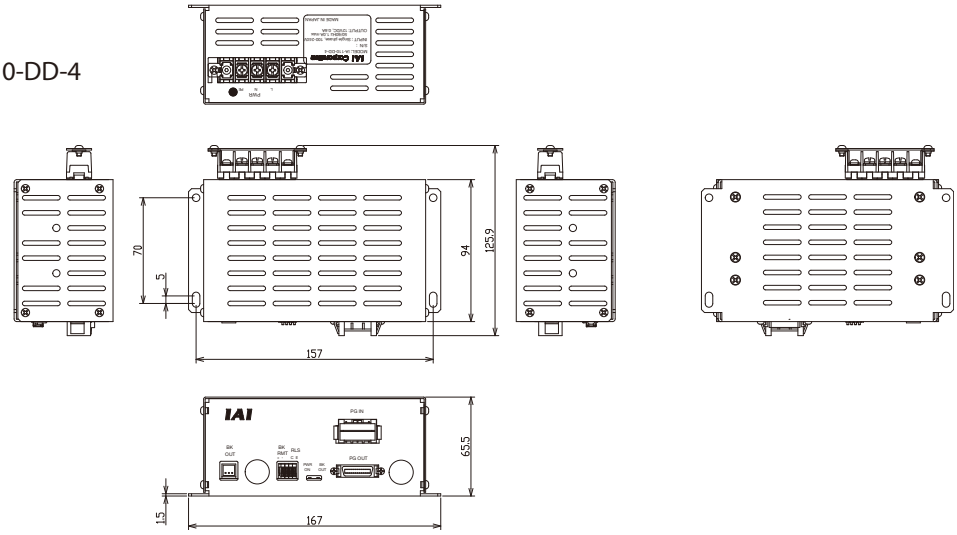

■ Wiring Diagram When Brake Box is Used

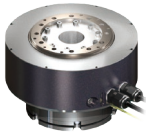

DDA

Encoder cable
Model: CB-X3-PA□□□

Brake cable
Model: CB-DDB-BK□□□

Motor cable
Model: CB-X(XMC)-MA□□□

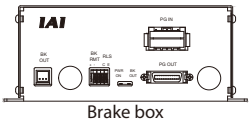

Brake box

Encoder cable
Model: CB-X3-PA010
(Comes with the brake box)

Main power supply
100VAC~240VAC

Controller
SCON-CB
XSEL-P/Q/R/S

Flange Option Code: FL

A bracket that attaches to the body with bolts from the top side.

DDA-LT18C
Model Number: DDA-FL-LT18

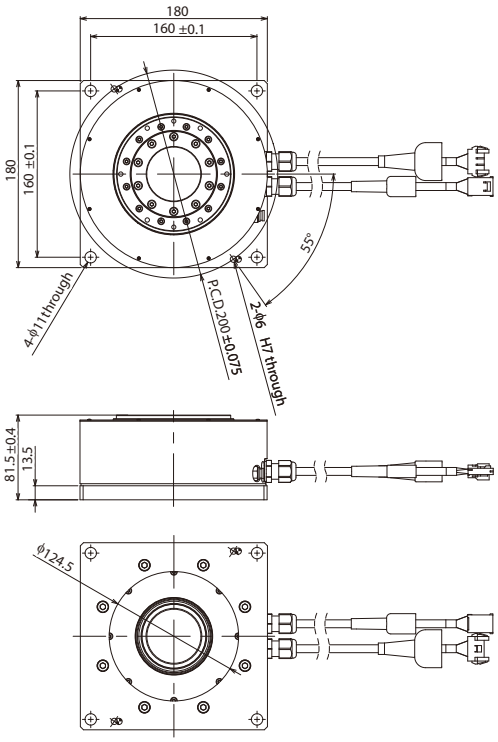

DDA-LH18C
Model Number: DDA-FL-LH18

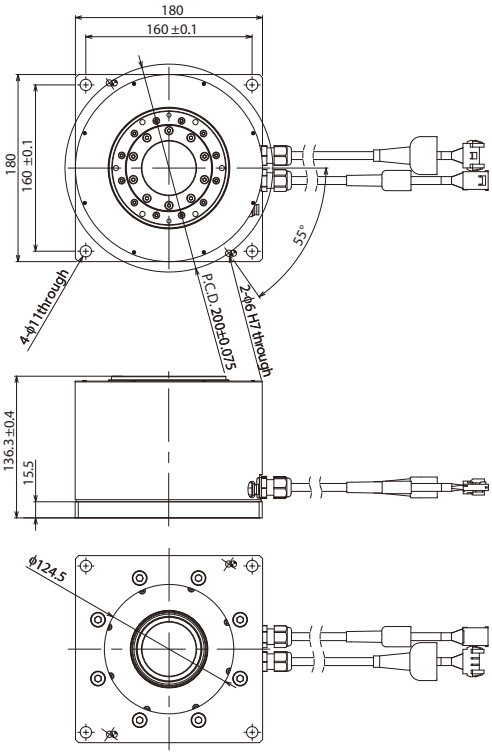

SCON-CB

Position Controller

List of Models

Model	SCON-CB										
External view											
I/O type	Standard		Field network type (*1)								
	PIO connection specification (*1)		DeviceNet	CC-Link	PROFIBUS	CompoNet	MECHATROLINK	MECHATROLINK	EtherCAT	EtherNet/IP	PROFINET
			DeviceNet connection	CC-Link connection	PROFIBUS-DP connection	CompoNet connection	MECHATROLINK-I,II connection	MECHATROLINK-III connection	EtherCAT connection	EtherNet/IP connection	PROFINET IO connection
I/O type code	NP/PN		DV	CC	PR	CN	ML	ML3	EC	EP	PRT
Applicable encoder type	Index absolute	Multi-rotation absolute	Index absolute/Multi-rotation absolute								
	CB/CGB	CB/CGB	LC/LCG								

(Note) The index absolute type cannot be used in the pulse-train control and MECHATROLINK-III control.
(*1) Please note that the network specifications cannot be operated on the PIO or pulse-train. The PLC type (LC/LCG) cannot be connected on the pulse-train.

Controller Model

■ Positioner Single-axis Type <SCON> Model

* The 200W motor used by the DDA is larger than a normal 200W motor, so the motor type for the controller will be 200S and its size will be larger than the 400W motor.

SCON – [ ] – [ ] – [ ] – [ ] – [ ] – [ ] – **2**

Series – Type – Motor Type – Encoder Type – I/O Type – I/O Cable Length – Power Supply Voltage

CB	High-function type
CGB	Safety category compliant type
LC	PLC equipped type
LCG	Safety category PLC equipped type

200S	For 200W motor
600	For 600W motor

AI	Index absolute type
AM	Multi-rotation abs. type

NP	PIO NPN (Standard)	ML3	MECHATROLINK-III
PN	PIO PNP	PR	PROFIBUS-DP
DV	DeviceNet	EC	EtherCAT
CN	CompoNet	EP	EtherNet/IP
CC	CC-Link	PRT	PROFINET IO
ML	MECHATROLINK-I, II		

0	No cable	3	3m
2	2m (Standard)	5	5m

* When a field network specification is selected, the I/O cable length will be "0".

System Configuration

■ When the SCON Controller is Connected

PLC (To be supplied by the customer)

Option
Regenerative resistor unit
Model: RESU-2/RESUD-2
(Please contact IAI for more details.)

Supplied with the controller
I/O flat cable
Model: CB-PAC-PIO020
Standard: 2m

Option
Touch panel teaching pendant
Model: TB-02-□
(Please see individual TB-02 catalog for more details.)

Supplied with the actuator
Motor cable
Model: CB-X-MA□□□ (LT18C□)
CB-XMC-MA□□□ (LH18C□)

SCON

Option
Field network

DDA

Supplied with the actuator *1
Encoder cable
Model: CB-X3-PA□□□

PC

Option
PC compatible software
RS232 connection version
Model: RCM-101-MW
USB connection version
Model: RCM-101-USB
(Please contact IAI for more details.)

Main power supply
Single-phase 200VAC
Drive source cutoff circuit (to be supplied by the customer)
Only required by the safety category compliant models.

* Be sure to use a noise filter on the power supply. (For recommended models, please contact IAI.)

*1 The wiring diagram is different for models with brakes.
Please refer to P.13 for more information.

X-SEL

Program Controller

List of Models

Model	P	Q	R	S
Type	Large-capacity type	Large-capacity type (Safety category specification)	High-function type	High-function type (Safety category specification)
External view				
Description	Large-capacity type that can control up to 6 axes / 2,400W	Large-capacity type that's compatible with the safety category 4	High-function type that allows up to 8-axis operation	Safety category 4 compatible high-function type

Controller Model

■ Program Multi-axis Type <XSEL> Model

XSEL — [ ] — [ ] — [ ] — [ ] — [ ] — [ ] — [ ] — [ ] — [ ]

Series — Type — Number of Connected Axes — Motor Type — Encoder Type — Option — Motor Type — Encoder Type — Option

(Details of the 1st axis) (Details of the 2nd~8th axis)

For subsequent models, please contact IAI.

P	6-axis type
Q	6-axis safety category type
R	8-axis type
S	8-axis safety category type

1	1 axis
~	~
8	8 axes

(P/Q type is up to 6 axes)

AI	Index absolute type
AM	Multi-rotation absolute type

B	Brake

200	For 200W motor
600	For 600W motor

Notes It can simultaneously operate actuators (single-axis robot and ROBO Cylinder) other than the DDA motor on a single controller. For connectable actuators other than the DDA motor, please contact IAI.

System Configuration

■ When the XSEL Controller is Connected

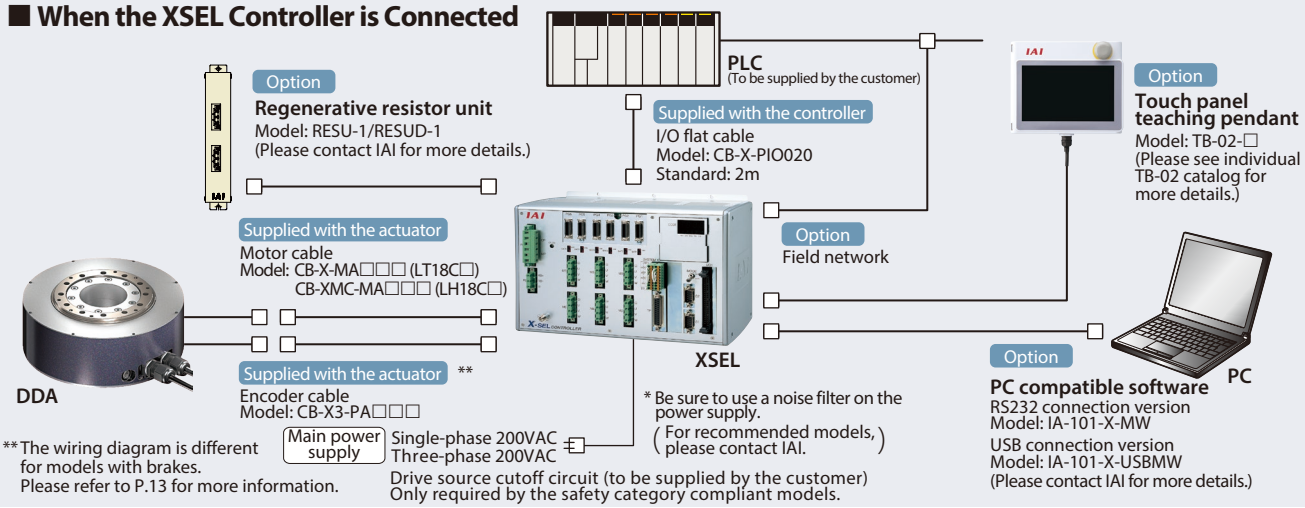

Precautions

■ Installation

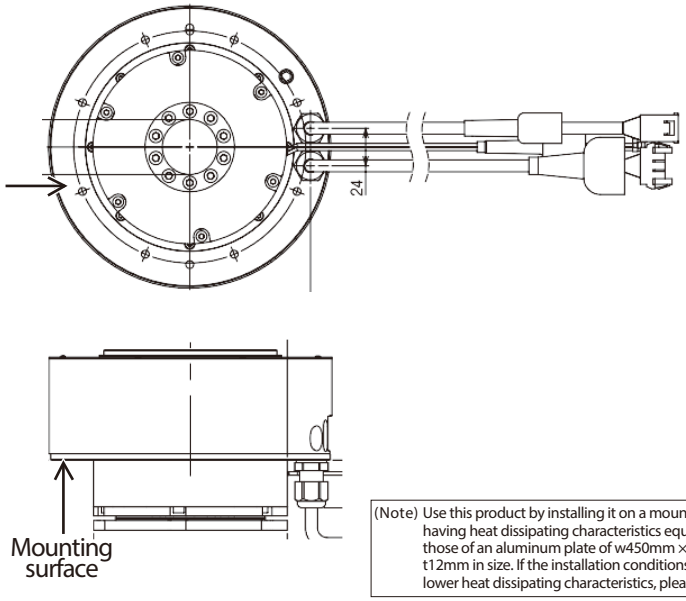

(Note) Use this product by installing it on a mounting surface having heat dissipating characteristics equivalent to those of an aluminum plate of w450mm × d450mm × t12mm in size. If the installation conditions necessitate lower heat dissipating characteristics, please consult IAI.

* For models with brake and cable exit direction to the bottom, a clearance hole is required.

Installation Orientation

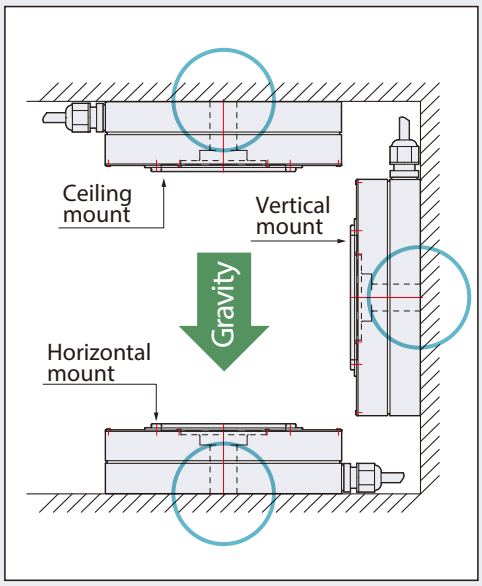

■ Operation Type

This product is available in 2 operation types depending on the operation conditions.
Please check the features and precautions on each type before use.

Operation type	Index absolute type		Multi-rotation absolute type	
Controller type	SCON-CB	XSEL(*1)	SCON-CB	XSEL(*1)
Operation range	0~359.999°		±9,999° (±2,520°) max.	
Maximum amount of movement in a single movement command	360°	180°(*2)	Above operation range	
Limitless rotation	Yes (*3)		No	
Home return operation	Not required		Not required (*4)	
Absolute battery	Not required		Required	

* ( ) is for 20-bit

(*1)The high resolution specification can be connected only to the SCON-CB

(*2)When the XSEL index type travels more than 180° from the current position, it rotates in a direction that requires a shorter travel distance to reach the target position.
Therefore, please note that the direction of rotation changes according to the current position and travel distance.
If you want to specify the direction of travel, use the SCON-CB.

(*3)The index type can be rotated in a given direction infinitely, but it actually cannot continue to rotate in the same direction without stopping, like a regular motor does, because the maximum travel distance per command from the XSEL controller is 180°.
If you want to allow the motor to rotate continuously, use the SCON-CB.

(*4)Home return is required for the multi-rotation absolute encoder during the initial setting and replacement of the absolute battery.

■ Controllers

- For the DDA with 200W motor, the outside dimensions of the SCON-CB controller will be the same as the size of the 400W motor. (Please contact IAI for the details of the SCON-CB controller.)
- One and two regenerative resistor unit(s) are required for LT18C□ and LH18C□ respectively to operate a DDA motor with the SCON-CB.
- When operating DDA motor(s) with the XSEL controller, regenerative resistor units are required as shown below.

Number of DD motor(s)		1	2	3	4	5	6	7	8
Number of regenerative resistor units	LT18C□	1		2		3		4	
	LH18C□	2	4	(Cannot be connected)					

- The number of DDA motor(s) connectable to the XSEL controller is a max. of 8 units for the LT18C type, and a max. of 2 units for the LH18C type.
- Please note that, when the DDA motor is operated with the SCON-CB, the motor cannot be connected to the ROBO Cylinder gateway function of the XSEL controller.
- Calculation for the power supply value: LT18C type: single-phase 600W, three-phase 200W. LH18C type: single-phase 1,200W, three-phase 600W.

Selecting the DD Motor

Conditions for Selection

The followings should be checked to determine whether the DDA motor can be used to suit the specific conditions required by the customer:

1 Check Load Conditions

The customer should confirm that the following three points under actual use do not exceed their maximum allowable levels as specified for the DDA motor.

[1] Thrust load	The **total load** of device(s) mounted on the actuator
[2] Load moment applied	The **total load moment** of device(s) mounted on the actuator
[3] Load inertia	The **load inertia** of device(s) mounted on the actuator

$J = 1/8 \times M \times D^2$ [kg·m²]

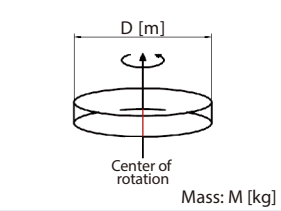

$J = M \times R^2 + 1/8 \times M \times D^2$ [kg·m²]

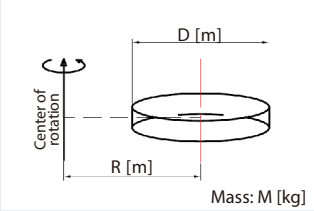

$J = 1/12 \times M \times (a^2 + b^2)$ [kg·m²]

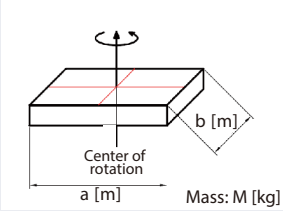

$J = M \times R^2 + 1/12 \times M \times (a^2 + b^2)$ [kg·m²]

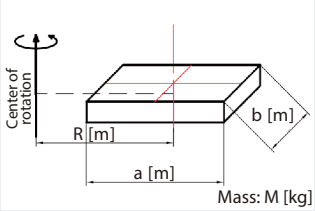

2 Check Operating Conditions

Check the distance, speed, acceleration, deceleration, stop time and other conditions in actual operation against the DDA motor specifications to determine whether the DDA motor can be used under the applicable operating conditions.
Please contact IAI for assistance.

Continuous Operation Area

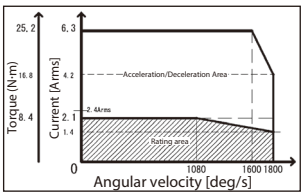

LT18C□ type

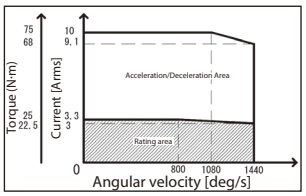

LH18C□ type

3 Travel Time Guide

The travel time changes according to the load inertia. See the tables below to check the travel time data.

* The data in the tables are for a reference only and do not guarantee the actual travel times.

LT18C□

Load inertia lower limit [kg·m²]	0	0.005	0.01	0.02	0.03	0.04	0.05	0.06	0.07	0.08	0.09	0.1	0.2	0.3	0.4	0.5
Load inertia upper limit [kg·m²]	0.005	0.01	0.02	0.03	0.04	0.05	0.06	0.07	0.08	0.09	0.1	0.2	0.3	0.4	0.5	0.6
45° travel time [sec.]	0.09	0.10	0.11	0.12	0.13	0.14	0.15	0.17	0.19	0.21	0.23	0.39	0.62	0.70	0.87	1.11
90° travel time [sec.]	0.12	0.12	0.14	0.16	0.17	0.18	0.20	0.22	0.24	0.26	0.29	0.48	0.73	0.83	1.02	1.23
180° travel time [sec.]	0.17	0.17	0.19	0.21	0.23	0.24	0.27	0.29	0.32	0.35	0.37	0.60	0.89	1.01	1.22	1.42
270° travel time [sec.]	0.22	0.22	0.24	0.26	0.27	0.29	0.32	0.35	0.38	0.41	0.44	0.69	1.00	1.14	1.36	1.68

(Note) The time listed in the above table is the duration from the reception of a travel command until convergence within the positioning band of 0.028 degrees (approximately 100 arcseconds).

LH18C□

Load inertia lower limit [kg·m²]	0	0.005	0.01	0.02	0.02	0.03	0.04	0.06	0.08	0.10	0.15	0.2	0.3	0.4	0.6	0.8	1.0	1.2	1.4
Load inertia upper limit [kg·m²]	0.005	0.01	0.015	0.02	0.03	0.04	0.06	0.08	0.1	0.15	0.2	0.3	0.4	0.6	0.8	1	1.2	1.4	1.8
45° travel time [sec.]	0.098	0.096	0.096	0.097	0.099	0.104	0.113	0.12	0.126	0.14	0.157	0.207	0.257	0.352	0.447	0.53	0.629	0.795	0.875
90° travel time [sec.]	0.129	0.128	0.127	0.128	0.131	0.136	0.144	0.153	0.163	0.184	0.208	0.268	0.329	0.44	0.549	0.646	0.758	0.941	1.035
180° travel time [sec.]	0.192	0.19	0.19	0.191	0.193	0.199	0.207	0.215	0.225	0.249	0.279	0.354	0.428	0.562	0.692	0.806	0.933	1.133	1.257
270° travel time [sec.]	0.254	0.252	0.252	0.253	0.256	0.262	0.27	0.278	0.288	0.312	0.341	0.42	0.504	0.655	0.8	0.925	1.064	1.274	1.415

(Note) The time listed in the above table is the duration from the reception of a travel command until convergence within the positioning band of 0.028 degrees (approximately 100 arcseconds).

Cables

Model Number CB-X-MA□□□

* Please indicate the cable length (L) in □□□, maximum 30m, e.g.) 080 = 8m

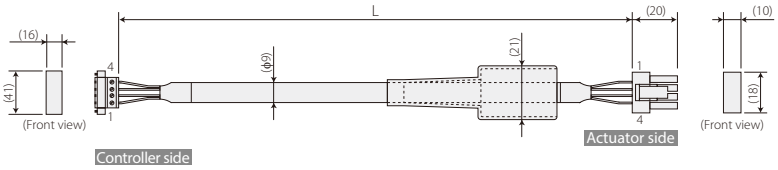

Wiring	Color	Signal	No.
0.75sq	Green	PE	1
	Red	U	2
	White	V	3
	Black	W	4

No.	Signal	Color	Wiring
1	U	Red	0.75sq (crimped)
2	V	White	
3	W	Black	
4	PE	Green	

Minimum bending radius r = 51mm or more
(Dynamic bending condition)
*** Only robot cable is available for this model.**

Model Number CB-XMC-MA□□□

* Please indicate the cable length (L) in □□□, maximum 30m, e.g.) 080 = 8m

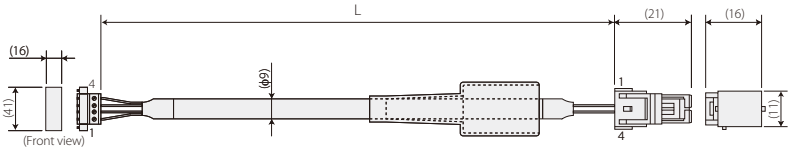

Wiring	Color	Signal	No.
1.25sq	Green	PE	1
	Red	U	2
	White	V	3
	Black	W	4

No.	Signal	Color	Wiring
1	U	Red	1.25sq (crimped)
2	V	White	
3	W	Black	
4	PE	Green	

Minimum bending radius r = 55mm or more
(Dynamic bending condition)
*** Only robot cable is available for this model.**

Model Number CB-X3-PA□□□

* Please indicate the cable length (L) in □□□, maximum 30m, e.g.) 080 = 8m

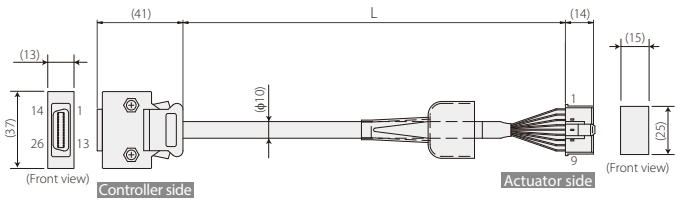

Wiring	Color	Signal	No.
AWG26 (Soldered)	—	—	10
	—	—	11
	—	E24V	12
	White/Green	OV	13
	White/Orange	LS	26
	—	CREEP	25
	—	OT	24
	—	RSV	23
	—	—	9
	—	—	18
	—	—	19
	White/Blue	A+	1
	White/Yellow	A—	2
	White/Red	B+	3
	White/Black	B—	4
	White/Purple	Z+	5
	White/Gray	Z—	6
	Orange	SRD+	7
	Green	SRD—	8
	Purple	BAT+	14
	Gray	BAT—	15
	Red	VCC	16
	Black	GND	17
	Blue	BKR—	20
	Yellow	BKR+	21
	—	—	22

Shield is clamp connected to the hood

Drain Wire and Braided Shield

No.	Signal	Color	Wiring
1	A	White/Blue	AWG26 (crimped)
2	Ā	White/Yellow	
3	B	White/Red	
4	B̄	White/Black	
5	Z	White/Purple	
6	Z̄	White/Gray	
7	LS+	White/Orange	
8	—	—	
9	FG	Drain	
10	SD	Orange	
11	SD	Green	
12	BAT+	Purple	
13	BAT—	Gray	
14	VCC	Red	
15	GND	Black	
16	LS—	White/Green	
17	BK—	Blue	
18	BK+	Yellow	

Minimum bending radius r = 58mm or more
(Dynamic bending condition)
*** Only robot cable is available for this model.**

Model Number CB-DDB-BK□□□

** Please indicate the cable length (L) in □□□,maximum 20m, e.g.) 080 = 8m

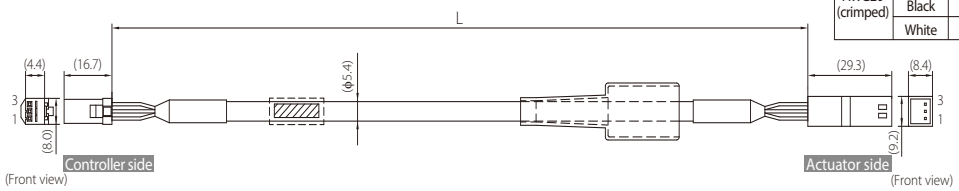

J11SF-03V-KX

Wiring	Color	Signal	No.
AWG20 (crimped)	Red	+	3
	Black	-	2
	White	FG	1

J11SFM-03V-KX

No.	Signal	Color	Wiring
3	+	Red	AWG20 (crimped)
2	-	Black	
1	FG	White	

Catalog No. CE0242-1A (0916)

IAI America, Inc.

Headquarters: 2690 W. 237th Street, Torrance, CA 90505 (800) 736-1712
Chicago Office: 110 E. State Pkwy, Schaumburg, IL 60173 (800) 944-0333
Atlanta Office: 1220 Kennestone Circle, Suite 108, Marietta, GA 30066 (888) 354-9470

www.intelligentactuator.com

IAI Industrieroboter GmbH
Ober der Röth 4, D-65824 Schwalbach am Taunus, Germany

IAI (Shanghai) Co., Ltd.
Shanghai Jiahua Business Center A8-303, 808,
Hongqiao Rd., Shanghai 200030, China

IAI Robot (Thailand) Co., Ltd.
825 Phairojkijja Tower 12th Floor, Bangna-Trad RD.,
Bangna, Bangna, Bangkok 10260, Thailand